4.4V-80V Vin, 1A, High Efficiency Synchronous Step-down DCDC Converter

6078}TETQ EOI /289.7AID 155/Lang (en-U

SCT CONFIDENTIAL

SCT CONFIDENTIAL

SCT CONF

SCT CONFIDENTIAL

		POWER GOOD (% of FB voltage)		
		POWER BAD (% of FB voltage)		
		POWER BAD (% of FB voltage)		
		POWER GOOD (% of FB voltage)		
		IPull-Up = 1 mA		

SCT CONFIDENTIAL

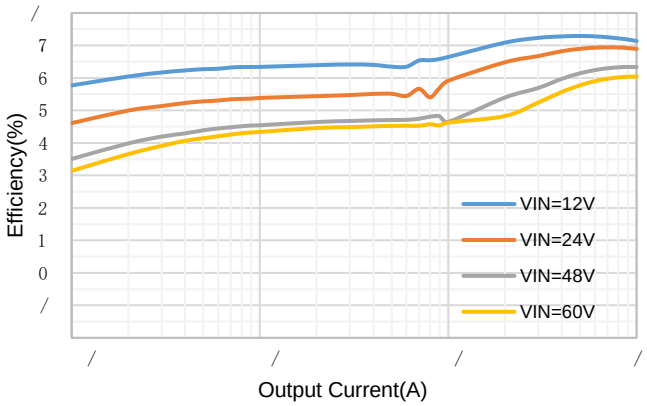

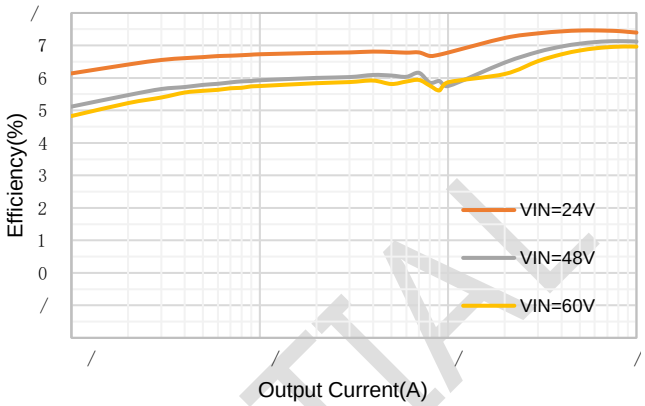

SCT CONFIDENTIAL

SCT CONFIDENTIAL

V L G H 9C H
F R Q W U “ H Y R O W D

SCT CONFIDENTIAL

SCT CONFIDENTIAL

SCT CONFIDENTIAL

SCT CONFIDENTIAL

SCT CONFIDENTIAL

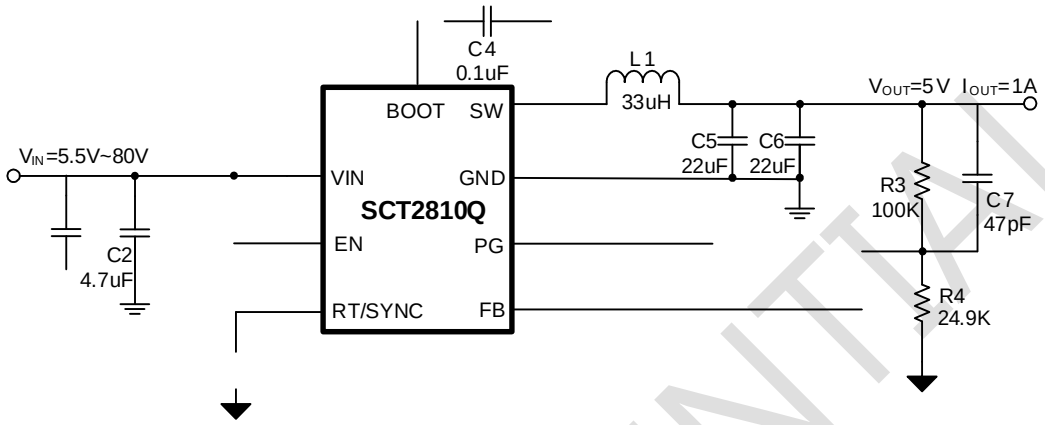

SCT CONFIDENTIAL

SCT CONFIDENTIAL

SCT CONFIDENTIAL

SCT CONFIDENTIAL

SCT CONFIP

SCT CONFID

SCT CONFIDENTIAL

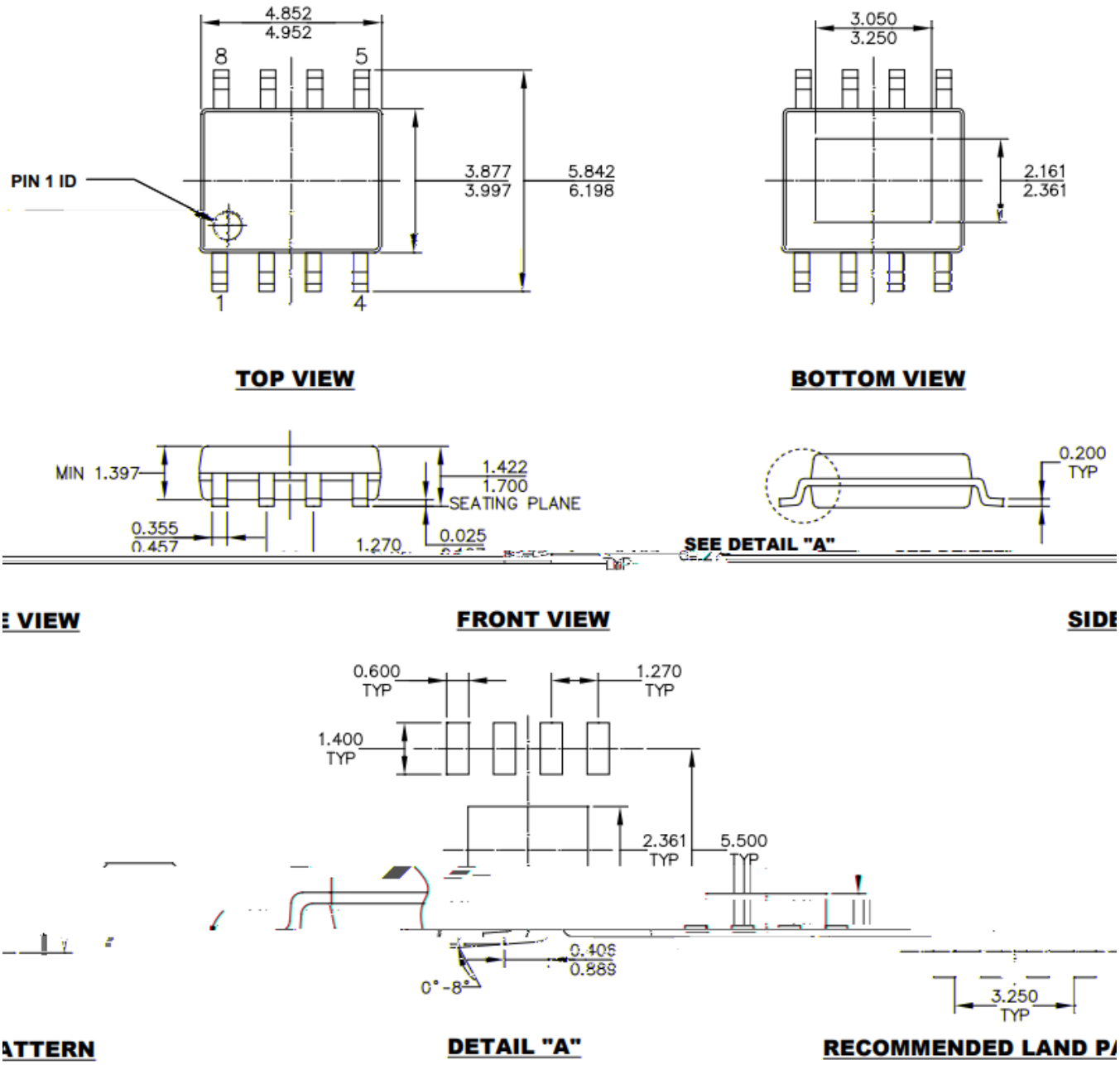

NOTE:

1) ALL DIMENSIONS ARE IN MI
2) PACKAGE LENGTH DOES N
3) PACKAGE WIDTH DOES NO
4) LEAD COPLANARITY (BOTT
5) DRAWING REFERENCE TO
6) DRAWING IS NOT TO SCALE

LLIMETERS.
OT INCLUDE MOLD FLASH, PROTRUSIONS OR GATE BURRS.
T INCLUDE INTERLEAD FLASH OR PROTRUSIONS.
OM OF LEADS AFTER FORMING) SHALL BE 0.1 MILLIMETER MAX.
JEDEC MS-012, VARIATION AA.
E.