P I on on M n b ha oll hn o s hn al n M s h bli hi om i i m m i hp ln l nb li al g g oll hn g n

NOL M

- Wide Input Voltage Range: 2.7V-20V
- Wide Output Voltage Range: 4.5V-20V
- Fully Integrated 10mΩ High Side FET and 6.5mΩ Low Side FET
- Programmable Peak Current Limit Up to 16A
- Typical Shut-down Current: 5uA
- Quiescent Current: 170uA
- Fixed 600KHz Switching Frequency
- Selectable PFM and FCCM at Light-load
- Parallel Mode
- External Soft Start and Compensation
- Output Overvoltage Protection
- Thermal Shutdown Protection
- QFN-13 3mm x 4mm Package

N I HM

- Bluetooth Audio
- Wireless Charger
- POS
- Lighting

M L N I H

The SCT12A6 is a high efficiency synchronous boost converter with fully integrated a 10mΩ high-side MOSFET and a 6.5mΩ low-side MOSFET, supporting 2.7V to 20V input voltage range and up to 16A switching current. The peak current limit can be adjustable with an external resistor. SCT12A6 supports up to 30W of load power from a 1-cell battery with integrated low Rds_on power MOSFETs.

The SCT12A6 adopts constant off-time peak current control to provide fast transient response. An external compensation network allows flexibility setting loop dynamics to achieve optimal transient performance at different load conditions.

The SCT12A6 offers selectable PFM and FCCM in light load condition, and it also offers parallel mode for higher power application. The switching frequency is fixed 600KHz.

The SCT12A6 features output overvoltage protection and thermal shutdown protection when the device overloads.

The device is available in a QFN-13 3mm x 4mm package.

N N I H

FB

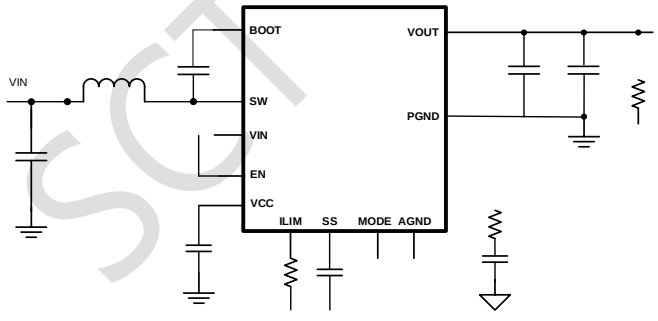

SCT CONFIDENTIAL

 ©2024 Silicon Content Technology Co., Ltd. All Rights Reserved

L P MI H B MNI L

NOTE: Page numbers for previous revisions may differ from page numbers in the current version.

Revision 0.8: Customer Sample.

Revision 0.81: Specification and Description Update.

P I L L H I L N I H

PART NUMBER	PACKAGING TYPE	STANDARD PACK QTY	PACKAGE MARKING	PINS	PACKAGE DESCRIPTION
SCT12A6FOAR	Tape & Reel	5000	12A6	13	QFN-13 3mm×4mm

M ON O L N HAM

Over operating free-air temperature unless otherwise noted(1)

DESCRIPTION	MIN	MAX	UNIT
BOOT	-0.3	28	V
VIN, SW, VOUT, EN	-0.3	22	V
VCC, ILIM, FB, COMP, SS, MODE	-0.3	5.5	V
Operating Junction Temperature T_J(2)	-40	125	°C
Storage Temperature T_{STG}	-65	150	°C

H I H AOL N I H

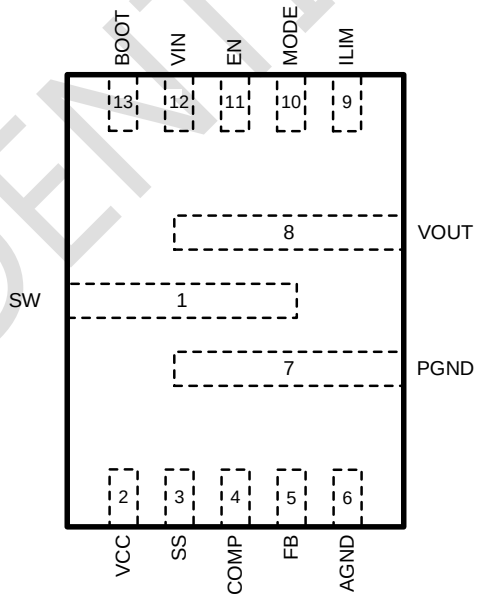

Top View: 13-Lead Plastic QFN 3mm x 4mm

(1) Stresses beyond those listed under Absolute Maximum Rating may cause device permanent damage. The device is not guaranteed to function outside of its Recommended Operation Conditions.

(2) The IC includes over temperature protection to protect the device during overload conditions. Junction temperature will exceed 175°C when over temperature protection is active. Continuous operation above the specified maximum operating junction temperature will reduce lifetime.

H OH N I HM

NAME	NO.	PIN FUNCTION
SW	1	Switching node of the boost converter.
VCC	2	Internal linear regulator output. Connect a 1uF or larger ceramic capacitor to ground. VCC can not to be externally driven. No additional components or loading is recommended on this pin.
SS	3	Place a ceramic cap from this pin to ground to program soft-start time. An internal 8uA current source pulls SS pin to VCC.
COMP	4	Output of the error amplifier and switching converter loop compensation point.
FB	5	Feedback Input. Connect a resistor divider from VOUT to FB to set up output voltage.
AGND	6	Analog Ground. Connected to PGND with single point.

SCT CONFIDENTIAL

 © 2024 Silicon Content Technology Co., Ltd. All Rights Reserved

SCT CONFIDENTI

SYMBOL	PARAMETER	TEST CONDITION	MIN	TYP	MAX	UNIT
	Hysteresis			400		mV
T_{SD}(1)	Thermal shutdown threshold	T_J rising		175		°C
	Hysteresis			25		°C

(1) Guaranteed by sample characterization, not tested in production.

SCT CONFIDENTIAL

 © 2024 Silicon Content Technology Co., Ltd. All Rights Reserved

N □ □B L □N L MN □M

V_{IN}=3.6V, V_{OUT}=12V, unless otherwise noted

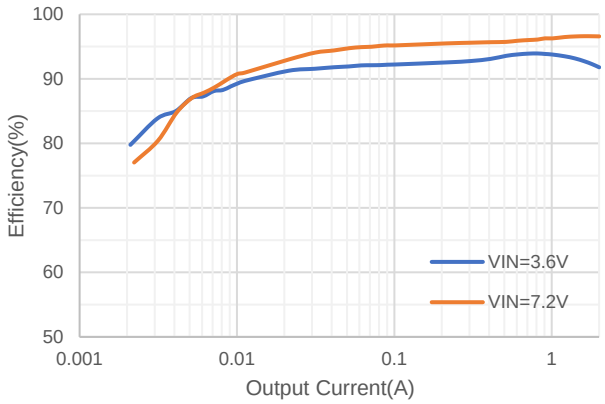

Figure 1. Efficiency, PFM

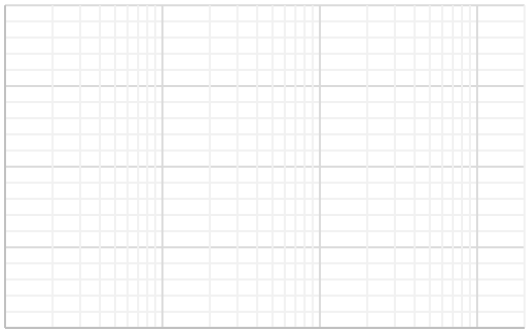

Figure 2. Load Regulation

Figure 3. Line Regulation, I_{LOAD}=1A

Figure 4. Peak Current Limit vs. R_{ILIM}

Figure 5. Reference Voltage vs. Junction Temperature

Figure 6. Switching Frequency vs. Junction Temperature

SCT CONFIDEN

 © 2024 Silicon Content Technology Co., Ltd. All Rights Reserved

OH□N I H I □E AL

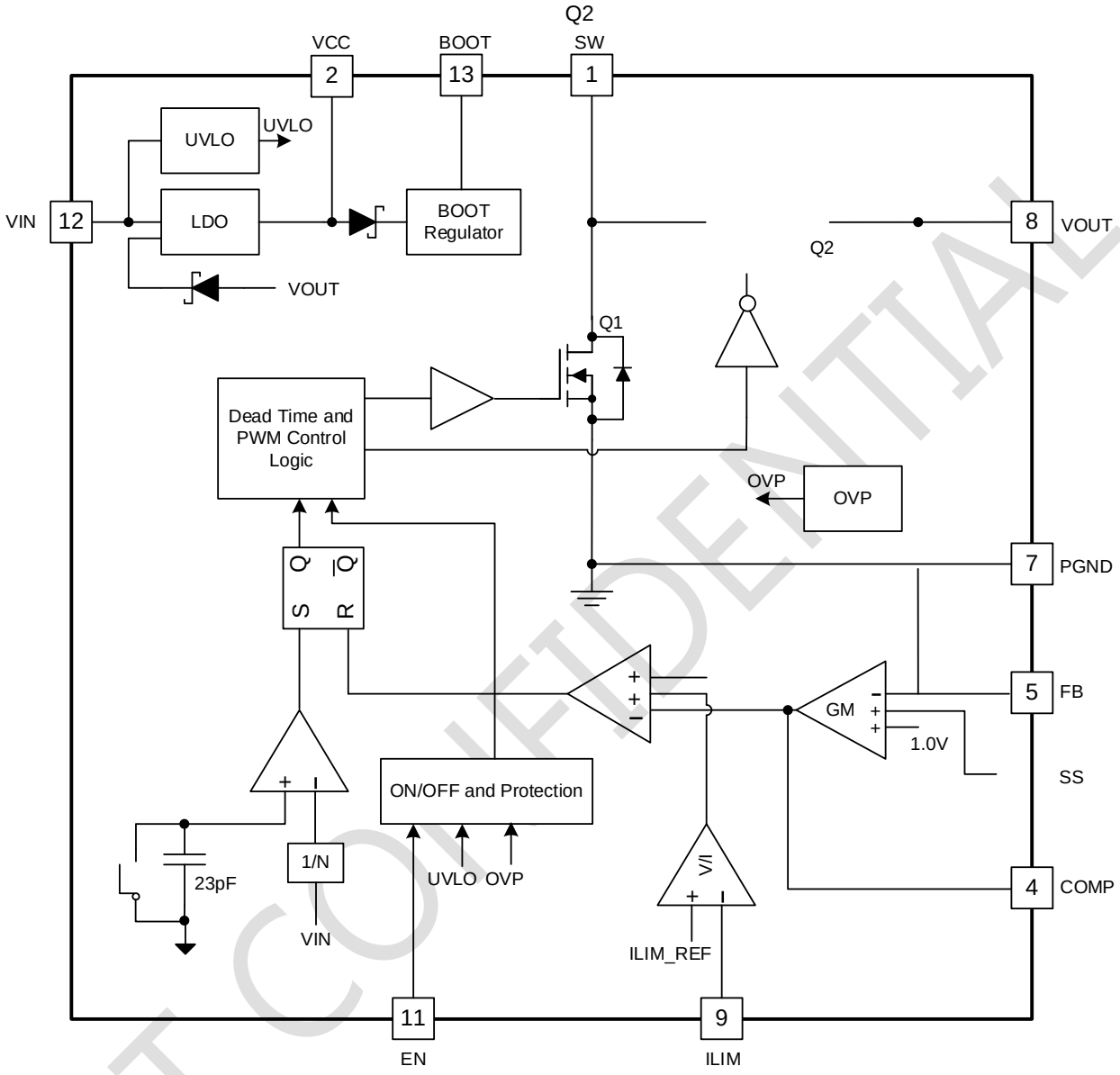

SCT CONFIDENTIAL

 © 2024 Silicon Content Technology Co., Ltd. All Rights Reserved

SCT CONFIDENTIAL

 © 2024 Silicon Content Technology Co., Ltd. All Rights Reserved

(1)

where

- t_{SS} is the soft start time
- V_{REF} is the internal reference voltage of 1V
- C_{SS} is the capacitance connecting to SS pin
- I_{SS} is the source current of 8uA to SS pin

Adjustable Peak Current Limit

The SCT12A6 boost converter implements cycle-by-cycle peak current limit function with sensing the internal low-side power MOSFET Q1 during overcurrent condition. While the Q1 is turned on, its conduction current is monitored by the internal sensing circuitry. Once the low-side MOSFET Q1 current exceeds the limit, it turns off immediately. An external resistor connecting ILIM pin to ground sets the low-side MOSFET Q1 peak current limit threshold. Use Equation 2 to calculate the peak current limit.

(2)

where:

- I_{LIM} is the inductor peak current limit
- R_{ILIM} is the peak current limit setting resistor in kΩ

For a typical current limit of 10A, the resistor value is 150kΩ. The minimum current limit must be higher than the required peak switch current at lowest input voltage and the highest output power not to hit the current limit and still regulate the output voltage. Notice the inductor peak current limit shall be set no higher than 16A and see Table 1 for a quick reference.

Table 1. R_{ILIM} Value for Inductor Peak Current Limit
(V_{IN}=3.6V, V_{OUT}=12V, L=1.5uH, room temperature)

I_{LIM}	R_{ILIM}
15A	100kΩ
10A	150kΩ
7.5A	200kΩ

This current limit function is realized by detecting the current flowing through the low-side MOSFET. The current limit feature loses function in the output hard short circuit conditions. At normal operation, when the output hard shorts to ground, there is a direct path to short the input voltage through high-side MOSFET Q2 or its body diode even the Q2 is turned off. This could damage the circuit components and cause catastrophic failure at load circuit.

Mode Selection

The SCT12A6 features PFM or FCCM mode at light load by MODE pin configuration. The programming information is listed in Table 2. The mode setting is latched in at each power up and is not able to be modified during operation. Cycling the input power or the EN pin can reselect the mode.

Table 2. MODE Pin Set-up for Mode Selection

MODE Pin Set-up	Connect to VCC	Connect to GND
Operation Mode	FCCM	PFM

SCT CONFIDENTIAL

 © 2024 Silicon Content Technology Co., Ltd. All Rights Reserved

Over Voltage Protection and Minimum On-time

The SCT12A6 features VOUT pin over voltage protection. If the VOUT pin is above 22V typical, the device stops switching immediately until the VOUT pin drops below 21 V. The OVP function prevents the connected output circuitry from un-predictive overvoltage.

The low-side MOSFET has minimum on-time 180ns typical limitation. While the device is operating at minimum on time and further increasing Vin push output voltage beyond regulation point. With output and feedback over voltage protection, the converter skips pulse with turning off high-side MOSFET and prevents output running higher to damage the load.

SCT CONFIDENTIAL

 © 2024 Silicon Content Technology Co., Ltd. All Rights Reserved

SCT CONFIDEN

Output Voltage

The output voltage V_{OUT} is set by an external resistor divider, R1 and R2 in typical application schematic. A minimum current of typical 20uA flowing through feedback resistor divider gives good accuracy and noise covering. The value of R1 can be calculated by Equation 3.

$$\_ \quad (3)$$

where:

- V_{REF} is the feedback reference voltage for V_{OUT}, typical 1.0V

Table 3. Feedback Resistor R1 and R2 Value for Output Voltage

V_{OUT}	R1	R2
9 V	472 KΩ	59 KΩ
12 V	649 KΩ	59 KΩ
15 V	826 KΩ	59 KΩ
18 V	1 MΩ	59 KΩ

Inductor Selection

The performance of inductor affects the power supply's steady state operation, transient behavior, loop stability, and boost converter efficiency. The inductor value, DC resistance, and saturation current influences both efficiency and the magnitude of the output voltage ripple. A larger inductance value reduces inductor current ripple and therefore leads to lower output voltage ripple. For a fixed DC resistance, a larger value inductor yields higher efficiency via reduced RMS and core losses. However, a larger inductor within a given inductor family will generally have a greater series resistance, thereby counteracting this efficiency advantage.

Inductor values can have ±20% or even ±30% tolerance with no current bias. When the inductor current approaches saturation level, its inductance can decrease 20% to 35% from the value at zero current depending on how the inductor vendor defines saturation. When selecting an inductor, choose its rated current especially the saturation current larger than its peak current during the operation.

To calculate the current in the worst case, use the minimum input voltage, maximum output voltage, maxim load current and minimum switching frequency of the application, while considering the inductance with -30% tolerance and low power conversion efficiency.

For a boost converter, calculate the inductor DC current as in Equation 4

$$\_\_\_\_\_ \quad (4)$$

Where

- V_{OUT} is the output voltage of the boost converter
- I_{OUT} is the output current of the boost converter
- V_{IN} is the input voltage of the boost converter
- η is the power conversion efficiency

Calculate the inductor current peak-to-peak ripple, I_{LPP}, as in Equation 5

$$\_\_\_\_\_ \quad (5)$$

Where

- I_{LPP} is the inductor peak-to-peak current
- L is the inductance of inductor
- f_{SW} is the switching frequency
- V_{OUT} is the output voltage

SCT CONFIDENTIAL

 © 2024 Silicon Content Technology Co., Ltd. All Rights Reserved

- V_{IN} is the input voltage

Therefore, the peak switching current of inductor, I_{LPEAK}, is calculated as in Equation 6.

(6)

Set the current limit of the SCT12A6 higher than the peak current I_{LPEAK} and select the inductor with the saturation current higher than the current limit.

The inductor's DC resistance (DCR), equivalent series resistance (ESR) at switching frequency and the core loss significantly affect the efficiency of power conversion

SCT CONFIDENTIAL

 © 2024 Silicon Content Technology Co., Ltd. All Rights Reserved

Loop Stability

An external loop compensation network comprises resister R3, ceramic capacitors C1 and C2 connected to the COMP pin to optimize the loop response of the converter. The power stage small signal loop response of constant off time with peak current control can be modeled by Equation 9.

(9)

where

- D is the switching duty cycle
- R_{load} is the output load resistance
- R_{SENSE} is the equivalent internal current sense resistor, which is 0.04Ω

(10)

where

- C_O is the output capacitance

(11)

where

- ESR is the equivalent series resistance of the output capacitor

(12)

The COMP pin is the output of the internal trans-conductance amplifier. Equation 13 shows the small signal transfer function of compensation network.

(13)

where

- G_{EA} is the amplifier's trans-conductance
- R_{EA} is the amplifier's output resistance
- V_{REF} is the reference voltage at the FB pin
- V_{OUT} is the output voltage
- f_{COMP1}, f_{COMP2} are the poles' frequency of the compensation network
- f_{COMZ} is the zero's frequency of the compensation network

The next step is to choose the loop crossover frequency, f_C. The higher frequency that the loop gain stays above zero before crossing over, the faster the loop response is. It is generally accepted that the loop gain cross over no higher than the lower of either 1/10 of the switching frequency, f_{SW}, or 1/5 of the RHPZ frequency, f_{RHPZ}.

Then set the value of R3, C1, and C2 in typical application circuit by following these equations.

(14)

where

- f_C is the selected crossover frequency.

(15)

(16)

If the calculated value of C2 is less than 10pF, it can be left open. Designing the loop for greater than 45°of phase margin and greater than 10-dB gain margin eliminates output voltage ringing during the line and load transient.

SCT CONFIDENTIAL

 © 2024 Silicon Content Technology Co., Ltd. All Rights Reserved

Application Waveforms

V_{IN}=3.6V, V_{OUT}=12V, unless otherwise noted

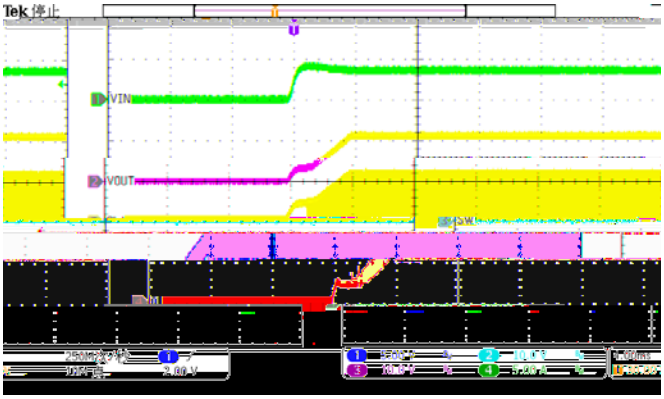

Figure 8. Power up (I_{LOAD}=2A)

Figure 9. Power down (I_{LOAD}=2A)

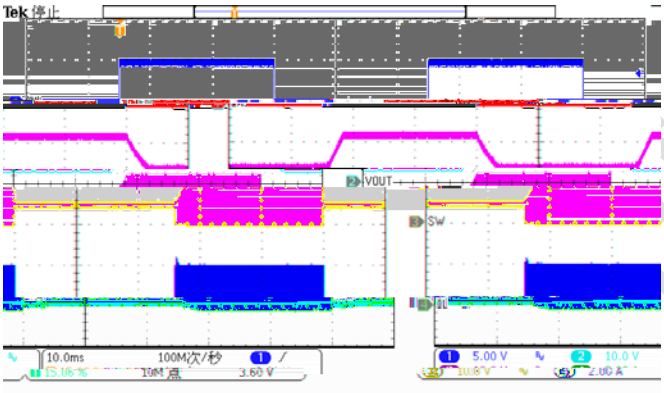

Figure 10. EN toggle (I_{LOAD}=0.1A)

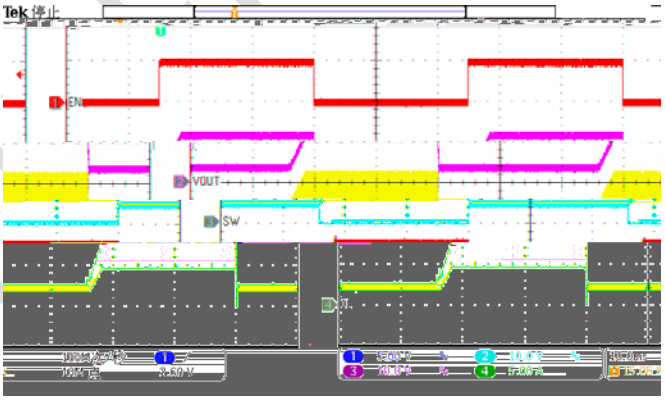

Figure 11. EN toggle (I_{LOAD}=2A)

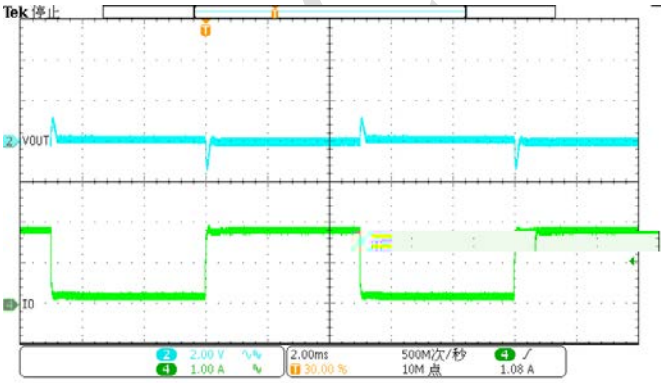

Figure 12. Load Transient (0.2A-1.8A)

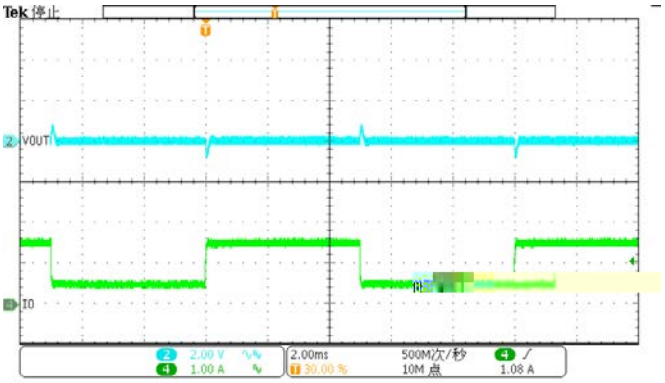

Figure 13. Load Transient (0.25A-1.5A)

 © 2024 Silicon Content Technology Co., Ltd. All Rights Reserved

Application Waveforms

V_{IN}=3.6V, V_{OUT}=12V, unless otherwise noted

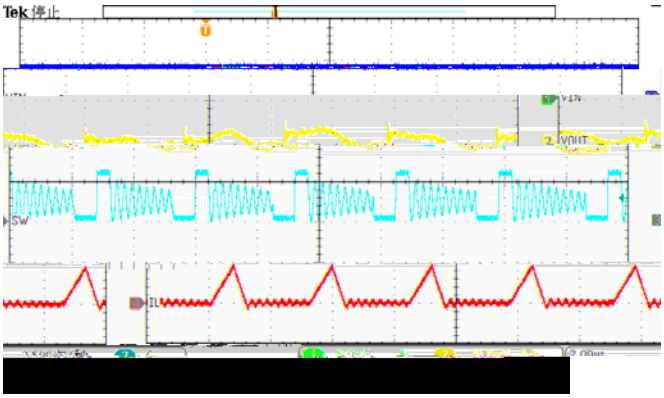

Figure 14. Output Ripple (I_{LOAD}=100mA, PFM)

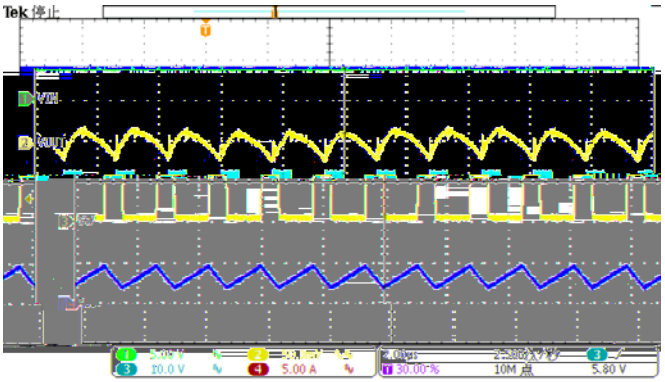

Figure 15. Output Ripple (I_{LOAD}=1A)

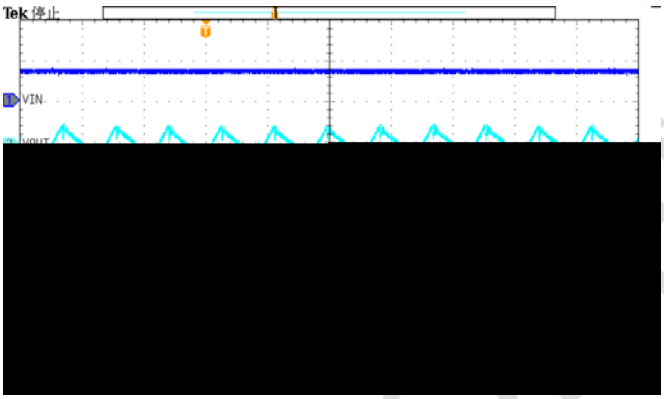

Figure 16. Output Ripple (I_{LOAD}=2A)

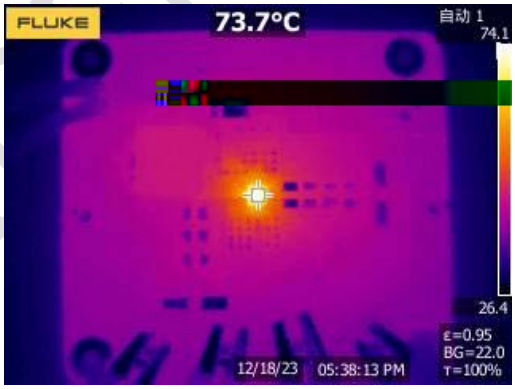

Figure 17. Thermal, 3.6V_{IN}, 12V_{OUT}, 2A

SCT CONFIDENTIAL

 © 2024 Silicon Content Technology Co., Ltd. All Rights Reserved

Layout Guideline

The regulator could suffer from instability and noise problems without careful layout of PCB. Radiation of high-frequency noise induces EMI, so proper layout of the high-frequency switching path is essential. Minimize the length and area of all traces connected to the SW pin, and always use a ground plane under the switching regulator to minimize coupling. The input capacitor needs to be close to the VIN pin and ground pad to reduce the input supply ripple. The placement and ground trace for the output capacitor is critical for the performance of SW ringing voltage. Place the output capacitor as close to VOUT pins and power ground pad as possible to reduce high frequency ringing voltage on SW pin.

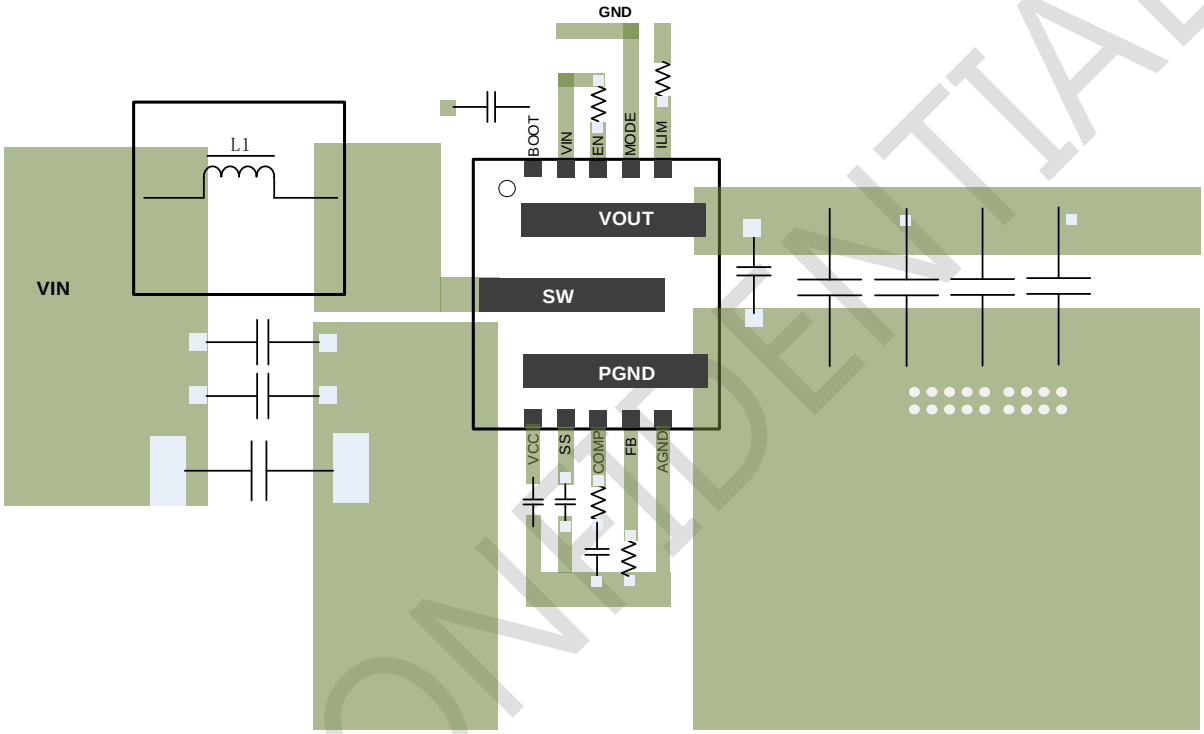

SCT CONFIDENTIAL

 © 2024 Silicon Content Technology Co., Ltd. All Rights Reserved

Thermal Considerations

The maximum IC junction temperature should be restricted to 125°C under normal operating conditions. Calculate the maximum allowable dissipation, $P_{D(max)}$, and keep the actual power dissipation less than or equal to $P_{D(max)}$. The maximum-power-dissipation limit is determined using Equation 17.

$$\frac{-}{\theta JA} \quad (17)$$

where

- T_A is the maximum ambient temperature for the application
- $R_{\theta JA}$ is the junction-to-ambient thermal resistance given in the Thermal Information table

The real junction-to-ambient thermal resistance $R_{\theta JA}$ of the package greatly depends on the PCB type, layout, thermal pad connection and environmental factor. Using thick PCB copper and soldering the thermal pad to a large ground plate enhance the thermal performance. Using more vias connects the ground plate on the top layer and bottom layer around the IC without solder mask also improves the thermal capability.

SCT CONFIDENTIAL

 © 2024 Silicon Content Technology Co., Ltd. All Rights Reserved

SCT CONFIDENTIAL

N H L H I L N I H

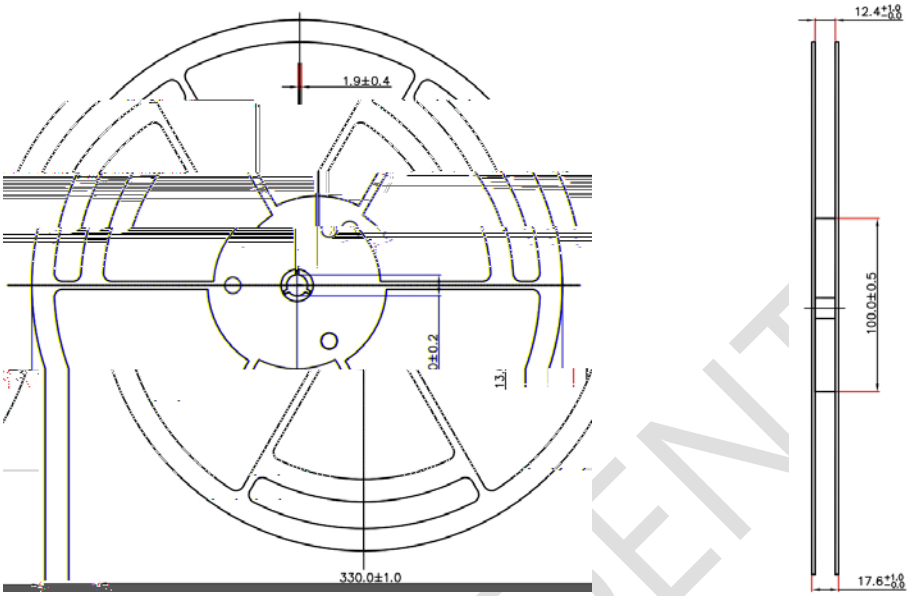

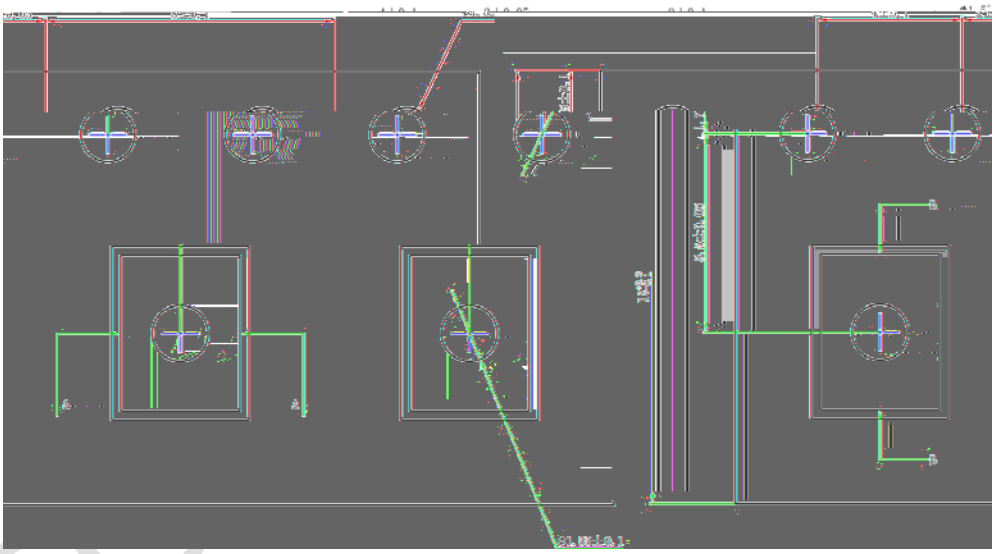

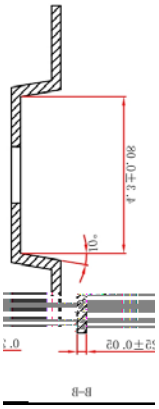

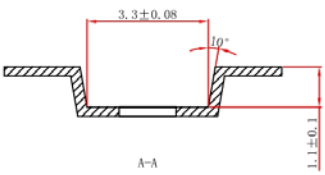

SCT CONFIDENTIAL

 © 2024 Silicon Content Technology Co., Ltd. All Rights Reserved